RIMC EXAM

1st JUNE'25

SUBJECT- - MATHS

ANSWER KEYS & SOLUTIONS

Q1. Let C.P be x, Profit = 20%

$$S.P = C.P \times \left(\frac{100+P\%}{100}\right)$$

$$= x\left(\frac{120}{100}\right) = \frac{6x}{5}$$

$$\text{New } C.P = x\left(\frac{100-10}{10}\right) = \frac{90x}{100} = \frac{9x}{10}$$

$$\text{New } S.P = \frac{6x}{5} - 30\text{Rs}$$

$$\text{New } S.P = \text{New } C.P \times \left(\frac{100+P\%}{100}\right)$$

$$\frac{6x}{5} - 30\text{Rs} = \frac{9x}{5}\left(\frac{100+20}{100}\right)$$

$$\frac{6x}{5} - 30 = \frac{9x}{10} \times \frac{120}{100}$$

$$\frac{6x-150}{5} = \frac{54x}{50}$$

$$6x = 1500$$

$$x = 250₹$$

Q2. First hour = 4m up

Next 30 mins = 2m down

Over all snail cover = $4-2=2m$ in $1\frac{1}{2}$ hr

Distance covered in $1\frac{1}{2}$ hr = 2m

$\left.\begin{array}{l} 2m \text{ takes} = 1\frac{1}{2} hr \end{array}\right\} \times 3$

6m takes = $4\frac{1}{2}$ hr

Net 4m = takes 1 hr.

Total time for 10m = $4\frac{1}{2}+1 = 5\frac{1}{2}$ hr.

RIMC EXAM

1st JUNE'25

SUBJECT- - MATHS

ANSWER KEYS & SOLUTIONS

Q3. Total votes = 5650 votes

Votes polled = 80% of 5650

$= \frac{80}{100} \times 5650$

$= 4520$

Rohul got = 55% of votes polled

Sohail got = 45% of votes polled.

$= \frac{45}{100} \times 450 = 2034$

Q4.

$$\begin{array}{r} 10 \\ 913 \overline{)10000} \\ -913 \\ \hline 870 \end{array}$$

Smallest five digit number

$= 10000 + (913 - 870)$

$= 10000 + 43$

$= 10043$

RIMC EXAM

1st JUNE'25

SUBJECT- - MATHS

ANSWER KEYS & SOLUTIONS

Q5. Total surface area of cube $= 6a^2$

$486 = 6a^2$

$81 = a^2$

$a = 9$

New Edge $= a+3 = 9+3 = 12cm$

New surface area $= 6(a+3)^2$

$= 6 \times 12^2 = 864 cm^2$

Q6.

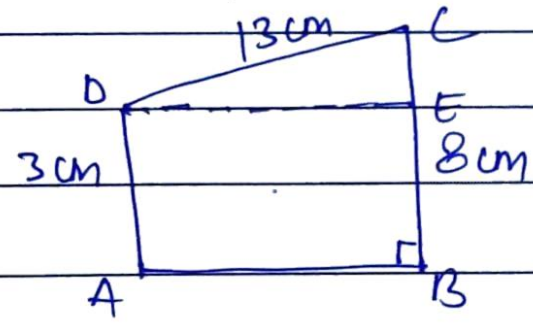

Let a line DE ⊥ to BC

DE = AB = height of trapezium.

BE = AD = 3cm

CE = BC − BE = 8 − 3 = 5cm

In Δ CED, $DC^2 = CE^2 + ED^2$

$13^2 = 5^2 + (ED)^2$

$$169 = 25 + ED^2$$
$$ED^2 = 144$$
$$ED = 12\,cm$$

Area of trapezium $= \frac{1}{2}$ (sum of parallel sides) $\times h$

$$= \frac{1}{2}(3+8) \times 6$$

$$= 11 \times 6 = 66\,cm^2$$

Q7. $x = \sqrt[3]{28}, \quad y = \sqrt[3]{27}$

$$x + y - \frac{1}{(x^2+xy+y^2)}$$

$$x^3 - y^3 = (x-y)(x^2+y^2+xy)$$

$$\frac{x^3-y^3}{x-y} = x^2+y^2+xy$$

$$x+y-\frac{1}{x^3-y^3/x-y} = x+y-\left(\frac{x-y}{x^3-y^3}\right)$$

$$x+y-\left(\frac{x-y}{28-27}\right) = x+y-(x-y)$$

$$2y = 2 \times \sqrt[3]{27}$$

$$= 6 \text{ Ans.}$$

Q8. ΔXYZ and ΔLMN are equilateral triangle.

In ΔXYZ,

$\angle X + \angle Y + \angle Z = 180^\circ$

$\angle PYX + \angle XYZ + \angle ZYL = 180^\circ$

$65^\circ + 60^\circ + \angle ZYL = 180^\circ$

$\angle ZYL = 55^\circ$

$\angle MLQ + \angle MLN + \angle BLY = 180^\circ$

$75^\circ + 60^\circ + \angle BLY = 180^\circ$

$\angle BLY = 45^\circ$

In ΔBLY

$\angle YBL = 180^\circ - (45 - 55)$

$= 180^\circ - 100 = 80^\circ$

In ΔZAB

$\angle ZAB + \angle B + \angle Z = 180^\circ$

$\angle ZAB = 180 - (80 + 60)$

$= 40^\circ$

RIMC EXAM

1st JUNE'25

SUBJECT- - MATHS

ANSWER KEYS & SOLUTIONS

Q9. Volume of big sphere = n × volume of small sphere

n (number of small sphere) = $\frac{\text{Volume of Bigger}}{\text{volume of small}}$

$$= \frac{4/3\,\pi R^3}{4/3\,\pi r^3}$$

$$= \frac{R^3}{r^3} = \frac{4^3}{1^3} = 64$$

Q10. Let the M.P be Rs. x And C.P be Rs. y

S.P (when Gain is 25%) = C.P $\left(\frac{(100 + G\%)}{100}\right)$

$$S.P = \frac{125}{100}y = \frac{5}{4}y$$

$$x = \frac{5}{4}y$$

RIMC EXAM

1st JUNE'25
SUBJECT- - MATHS

ANSWER KEYS & SOLUTIONS

After Giving D% Discount.
New profit = $12\frac{1}{2}\%$.

~~C.P = 100~~

$C.P \times \left(\frac{100+P\%}{100}\right) = S.P, \quad M.P\left(\frac{100-D\%}{100}\right) = S.P$

$C.P\left(\frac{100+P\%}{100}\right) = \left(\frac{100-D\%}{100}\right) \times M.P$

$y\,(100+P\%) = (100-D\%) \times x$

$y\,(100+12.5) = (100-D\%) \times \frac{5}{4}y$

$\frac{4 \times 112.5}{5} = 100-D\%$

$\therefore \quad D\% = 100-90 = 10\%.$

RIMC EXAM

1st JUNE'25

SUBJECT- - MATHS ANSWER KEYS & SOLUTIONS

Q11. Correct : Faulty Time.

$24\,hr : 24 + \left(\frac{10\,min}{60}\right) hr$

$24 : 24 + 1/6\ hr$

$24 : \frac{145}{6}$

$144 : 145$

$144x,\ 145x,$

$145x = 29h,\quad 144x = \frac{29h \times 144}{145}$

$= \frac{144h}{5} = 28\left(\frac{4}{5}h\right) = 28\,hr\ 48\,min$

Correct Time = 8 am + 28 hr 48 min

= 12:48 pm.

Q12. Area of floor $= \frac{Cost}{Rate} = \frac{360}{6} = 60\,m^2$

Area of 4 walls $= \frac{Cost}{Rate} - (\text{Area of door + window})$

$= \frac{1920}{12} + 10 = 160 + 10 = 170\ m^2$

Given, $l = 2b$

Area of Floor = $60 m^2$

$l \times b = 60 m^2$, $2b \times b = 60$, $b^2 = 30$

$b = \sqrt{30}\ m$

$l = 2b = 2\sqrt{30}\ m$

Area of 4 walls = 170

$2(l+b) \times h = 170$

$3\sqrt{30} \times h = 85$

$h = \frac{85}{3}\sqrt{30}\ m.$

Q13. $4 \times ON = GO$

O is Always - even, "O" Can only be 2.

$O = 2$, $N = 3$, $G = 9$

RIMC EXAM

1st JUNE'25

SUBJECT- - MATHS

ANSWER KEYS & SOLUTIONS

Q14. LCM = 360, HCF = 12, a−b = 48, a+b = ?

$a \times b = HCF \times LCM = 360 \times 12 = 4320$

$ab = 4320$

$(a-b)^2 = a^2+b^2-2ab$

$(48)^2 = a^2+b^2-2\times 4320$

$a^2+b^2 = 10944$

$(a+b)^2 = a^2+b^2+2ab$

$(a+b)^2 = 10944+8640 = 19584$

$a+b = \sqrt{19584} = 139.96.$

~~Q16.~~

Q15. $\left[1\frac{1}{8} \div \frac{3}{4}\right] \div \left[\left(\frac{1}{2} \text{ of } 1\frac{1}{2}\right) \div \left(3\frac{1}{2} - 1\frac{1}{4}\right) \text{ of } \frac{3}{4} - \frac{3}{4} \div 2\frac{1}{4}\right] \text{ of } \frac{3}{4}$

$\left(\frac{9}{8} \times \frac{4}{3}\right) \div \left[\left(\frac{3}{4}\right) \div \left(\frac{14-5}{4}\right) \text{ of } \frac{3}{4} - \frac{3}{4} \times \frac{4}{9}\right]$

of 3/4

$\frac{3}{2} \div \left[\frac{3}{4} \div \frac{27}{16} - \frac{1}{3}\right]$ of $3/4$

$\frac{3}{2} \div \left[\frac{4}{9} - \frac{1}{3}\right]$ of $3/4$

$\frac{3}{2} \div \frac{1}{9}$ of $3/4 = \frac{3}{2} \div \frac{1}{9} \times \frac{3}{4}$

$= \frac{3}{\cancel{2}} \times \frac{\cancel{12}^{6}}{1} = 18$

Q16 Same as Question 1.

Q17. $h = 3\sqrt{3}$ cm

Area $= \frac{\sqrt{3}}{4}a^2 = \frac{1}{2} B \times h$

$\frac{1}{2} \times a \times 3\sqrt{3} = \frac{\sqrt{3}}{4} \times a^2$

$a = 6$; Area $= \frac{1}{2} b \times h = \frac{1}{2} \times \cancel{6}^{3} \times 3\sqrt{3}$

$= 9\sqrt{3}$ cm^2

RIMC EXAM

1st JUNE'25

SUBJECT- - MATHS

ANSWER KEYS & SOLUTIONS

Q18. LCM = 462, HCF = 6

$a = 6x, \quad b = 6y$

$6x + 6y = 108$

$x + y = 18$, ~~LCM~~

$LCM = 462 = 6 \times x \times y$

$xy = 77$

$x + y = 18, \quad 77 = xy$

$(x-y)^2 = (x+y)^2 - 4xy$

$(x-y)^2 = 18^2 - 4 \times 77$

$= 324 - 308$

$= 16$

$x - y = 4, \quad x + y = 18$

$x = 11, \quad y = 7$

$a - b = 6x - 6y = 6(x-y)$

$= 6 \times 4 = 24$

Q19. Ratio of share = Ratio of one Daywork

$= \frac{1}{3} : \frac{1}{2} = 2:3$

Total Amount = 150

Share of Raghu $= \frac{3}{5} \times 150 =$ Rs. 90.

Q20. $n = ?$, $A = 15$, $Sum_1 = 15 \times n = 15n$

$1st = a + 30$, $last = b - 5$

New $A = 17.5$, $Sum_2 = 17.5n$

$Sum_2 - Sum_1 = 30 - 5$

$17.5n - 15n = 25$

$\boxed{n = 10}$

Part-B

Sol 21. l, length of swimming pool = 50 metre

b, breadth of swimming pool = 15 metre

h_1 = height at shallow end = $1\frac{1}{2}$ metre = $\frac{3}{2}$ m

h_2 = height at deeper end = $4\frac{1}{2}$ metre = $\frac{9}{2}$ m

Volume of swimming pool = $l \times b \times \left(\frac{h_1+h_2}{2}\right)$

$= \overset{25}{\cancel{50}} \times 15 \times \left(\frac{\frac{3}{2}+\frac{9}{2}}{\cancel{2}}\right)$

$= 25 \times 15 \times 6$

$= 2250\ m^3$

$\because 1m^3 = 1000L$ $\quad = 2250000L$

Sol 22.

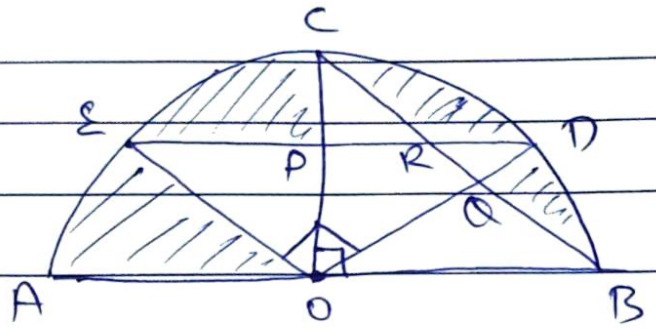

$OE \perp OD$ & $OC \perp AB$ $OE = 7cm$

Area of shaded region $= 44 cm^2$

(Area of triangle $= \frac{1}{2} \times$ base $\times$ height)

Area of both triangles $(OED, OCB) = 2 \times \frac{1}{2}(7 \times 7)$

$= 49 cm^2$

Area of semicircle $= \frac{1}{2}\pi r^2 = \frac{1}{2} \times \frac{22}{7} \times 7 \times 7$

$= 77 cm^2$

Area of unshaded region = Area of semicircle − Area of shaded region

$= 77 - 44 = 33 cm^2$

Area of region FOOR = Area of 2 triangles − Area of unshaded region

$= 49 - 33$

$= 16\,m^2$ Ans

Solu 23. Seating Arrangement

Arrange the members in 2 rows,

(1) 2 diagrams are possible

Above ones are sitting facing South & below ones are facing North. (Assumption)

(2) D is not sitting at any end

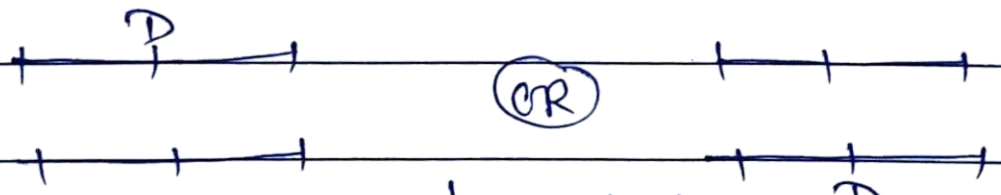

(3) B is sitting 2nd to left of C & A is neighbour of F.

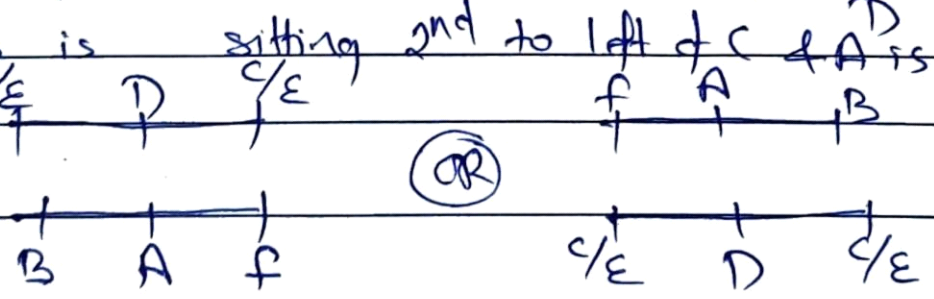

RIMC EXAM

1st JUNE'25
SUBJECT- - MATHS

ANSWER KEYS & SOLUTIONS

C is neighbour of A. So, C & E positions are not accurate.
Hence, Person sitting diagonally opposite to A can be either C or E. ~~Ans~~

Sol 24.

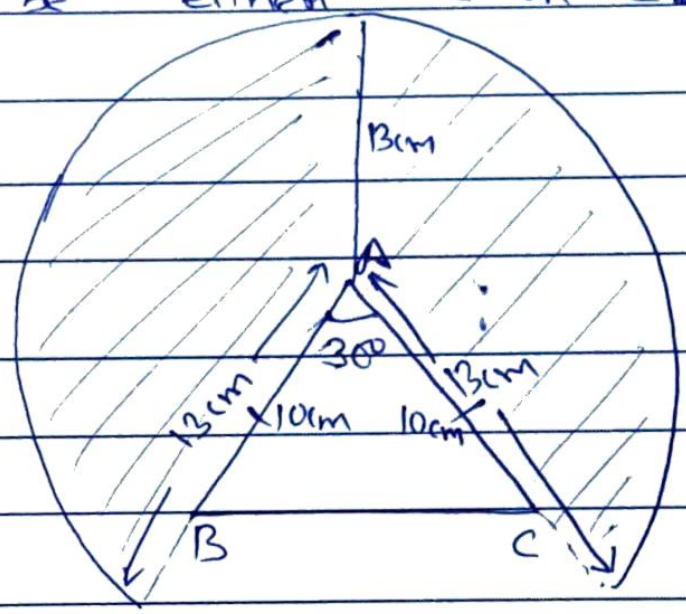

Given : $\angle BAC = 30°$

: $AB = AC = 10cm$

: length of rope tied to point A = 13cm

: Rope non the cow is allowed to enter ΔABC

To find : area grazed by cow

Calculate :-

Area = Area of circle - Area of minor sector

$$= \pi(r^2) - \frac{\theta}{360^\circ} \times \pi r^2$$

$$= \frac{22}{7} \times (13)^2 - \frac{30}{360^\circ} \times \frac{22}{7} \times (13)^2$$

$$= \frac{22}{7} \times 169 \times \left(1 - \frac{1}{12}\right)$$

$$= \frac{22}{7} \times 169 \times \frac{11}{12}$$

$$= \frac{20449}{42}$$

$$= 486.88 \text{ cm}^2$$

Sol 25.

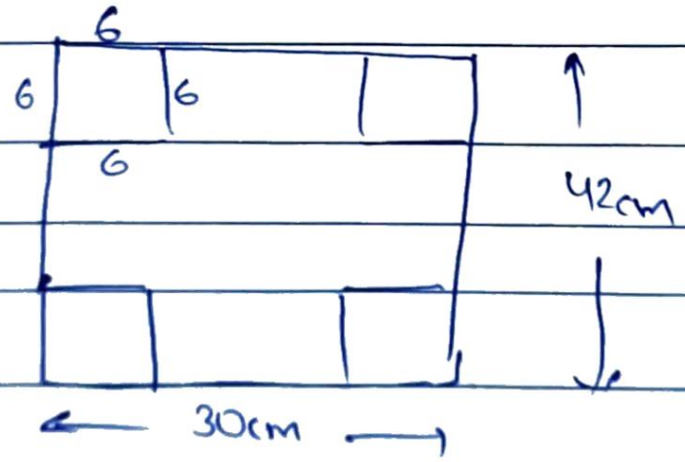

When the square portions are cut, the remaining sheet is made into an open box

length of box = 42 − 6 − 6 = 30 cm

breadth of box = 30 − 6 − 6 = 18 cm

height of box = 6 cm

Volume of box = $l \times b \times h$

$= 30 \times 18 \times 6$

$= 3240\ cm^3$

$(1000\ cm^3 = 1L)$ $= 3.24$ litre.

Sol. 26. Let the shares of Abhishek and Tarun be x and y respectively.

Time for Abhishek = 2yrs Time for Tarun = 3yrs.

$$\text{Amount} = P\left(1+\frac{r}{100}\right)^n$$

Amount of both persons are same.

RIMC EXAM

1st JUNE'25

SUBJECT- - MATHS

ANSWER KEYS & SOLUTIONS

$$x\left(1+\frac{5}{100}\right)^2 = y\left(1+\frac{5}{100}\right)^3$$

$$x \times \left(\frac{21}{20}\right)^2 = y \times \left(\frac{21}{20}\right)^3$$

$$x = y \times \left(\frac{21}{20}\right)^{3-2} \qquad \left[a^m \div a^n = a^{m-n}\right]$$

$$x = y \times \frac{21}{20}$$

$$x : y = 21 : 20$$

Abhishek's share $= \frac{21}{41} \times 180000$

$$= \frac{3780000}{41}$$

$$= ₹\ 92195\frac{5}{41}$$

Solu 27. Given: History books = 96
Science books = 240
Maths books = 336
Books have to be arranged in minimum number of stacks such that each stack contains book of only one subject.

Calculate :- a) Number of books arranged in each stack = HCF of (96, 240, 336)

$96 = 2 \times 2 \times 2 \times 2 \times 2 \times 3$
$240 = 2 \times 2 \times 2 \times 2 \times 3 \times 5$
$336 = 2 \times 2 \times 2 \times 2 \times 3 \times 7$

$HCF = 2 \times 2 \times 2 \times 2 \times 3 = 48$

b) No. of stacks of Maths books $= \frac{336}{48}$

$= 7$

c) Total length of each stack = no. of stack × length

Total length of history stack = 2 × 15 = 30 cm
Total length of science stack = 5 × 18 = 90 cm
Total length of maths stack = 7 × 20 = 140 cm.

d) Total height of each stack = (no. of books in each stack) × (thickness of each book)

height of history book stack = 48 × 15 = 720 cm
height of science book stack = 48 × 22 = 1056 cm
height of maths book stack = 2.5 × 48 = 120 cm

Sol 28. $P = ?$ $r\% = ?$ $A_{3yrs} = 5440$ $A_{5yrs} = 6400$

formula Used :-

$$A = P + SI$$

$$SI = \frac{P \times R \times T}{100}$$

$$5440 = P + \frac{P \times r \times 3}{100} = P\left(1 + \frac{3r}{100}\right) \quad \text{--- (1)}$$

$$6400 = P + \frac{P \times r \times 5}{100} = P\left(1 + \frac{5r}{100}\right) \quad \text{--- (2)}$$

Dividing (2) by (1)

$$\frac{\cancel{6400}\ 20}{\cancel{5440}\ 17} = \frac{\cancel{P}\left(1 + \frac{5r}{100}\right)}{\cancel{P}\left(1 + \frac{3r}{100}\right)}$$

$$20\left(1 + \frac{3r}{100}\right) = 17\left(1 + \frac{5r}{100}\right)$$

$$20 + \frac{60r}{100} = 17 + \frac{85r}{100}$$

$$3 = \frac{25r}{100}$$

$$12\% = r$$

Put r in (1)

$$5440 = P\left(1 + \frac{3(12)}{100}\right)$$

$$5440 = P \times \left(1 + \frac{9}{25}\right)$$

$$\overset{160}{\cancel{5440}} = P \times \frac{\cancel{34}}{25}$$

$$160 \times 25 = P$$

$$₹\,4000 = P$$

Sol 29.

$$\frac{2x+1}{10} - \frac{3-2x}{15} = \frac{x-2}{6}$$

$$\frac{3(2x+1) - 2(3-2x)}{\cancel{30}\,5} = \frac{x-2}{\cancel{6}}$$

$$6x+3-6+4x = 5(x-2)$$

$$10x - 3 = 5x - 10$$

$$5x = -7$$

$$x = -\frac{7}{5} \quad \text{— (1)}$$

$$\frac{2}{x} + \frac{5}{y} = 5$$

Put x from ①

$$\frac{2}{\left(-\frac{7}{5}\right)} + \frac{5}{y} = 5$$

$$-\frac{10}{7} + \frac{5}{y} = 5$$

$$\frac{5}{y} = 5 + \frac{10}{7}$$

$$\frac{\cancel{5}}{y} = \frac{\cancel{45}\,9}{7}$$

$$\frac{7}{9} = y$$

Sol 30. Amount spent on football = ₹9000

Representation of different sport in pie chart:-

football = 45°, Hockey = 100°, Cricket = 160°, Basketball = 20° & Tennis = 35°